ANNEXURE-A

TYPICAL CROSS SECTION OF CEMENT CONCRETE ROAD
(3.0M WIDE IN BLACK COTTON SOIL AREA)

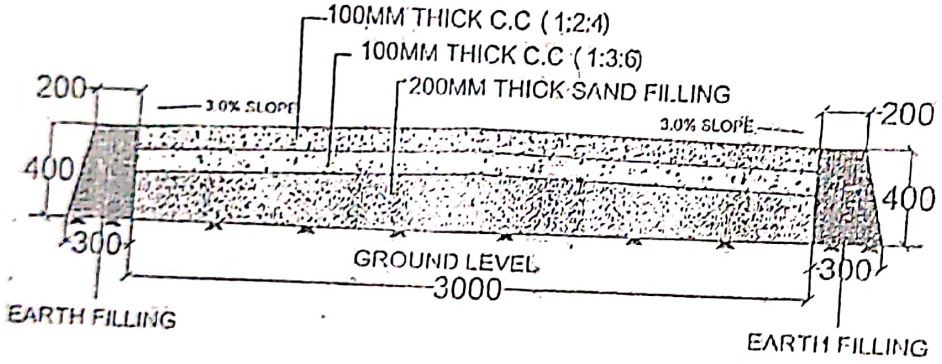

ALL DIMINESIONS ARE IN MM

ESTIMATED COST :-RS: 33.20 LAKHS/KM

19/1/2013

Scanned with OKEN Scanner