TYPICAL CROSS SECTION OF CEMENT CONCRETE ROAD WTH CUTT OFF

(3.0M WIDE IN HARD SOIL AREA)

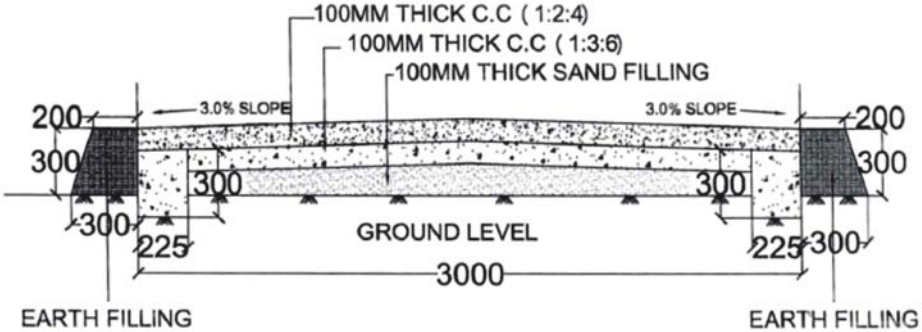

ALL DIMINESIONS ARE IN MM

ESTIMATED COST :-RS 32.30 LAKHS/KM