ANNEXURE:-B

TYPICAL CROSS SECTION OF CEMENT CONCRETE ROAD WTH CUTT OFF

(3.0M WIDE IN HARD SOIL AREA)

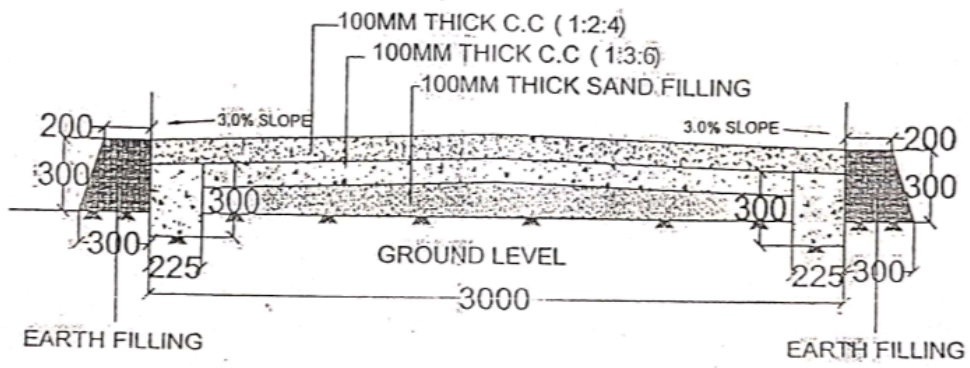

6 inch depth cuttoff (150mm)

ALL DIMINESIONS ARE IN MM

ESTIMATED COST :-RS 32.30 LAKHS/KM

19/1/2013
(Asst Engg)