Drawing and Estimating of C.C Road

) Drawing and Estimating for Hard Soil Area

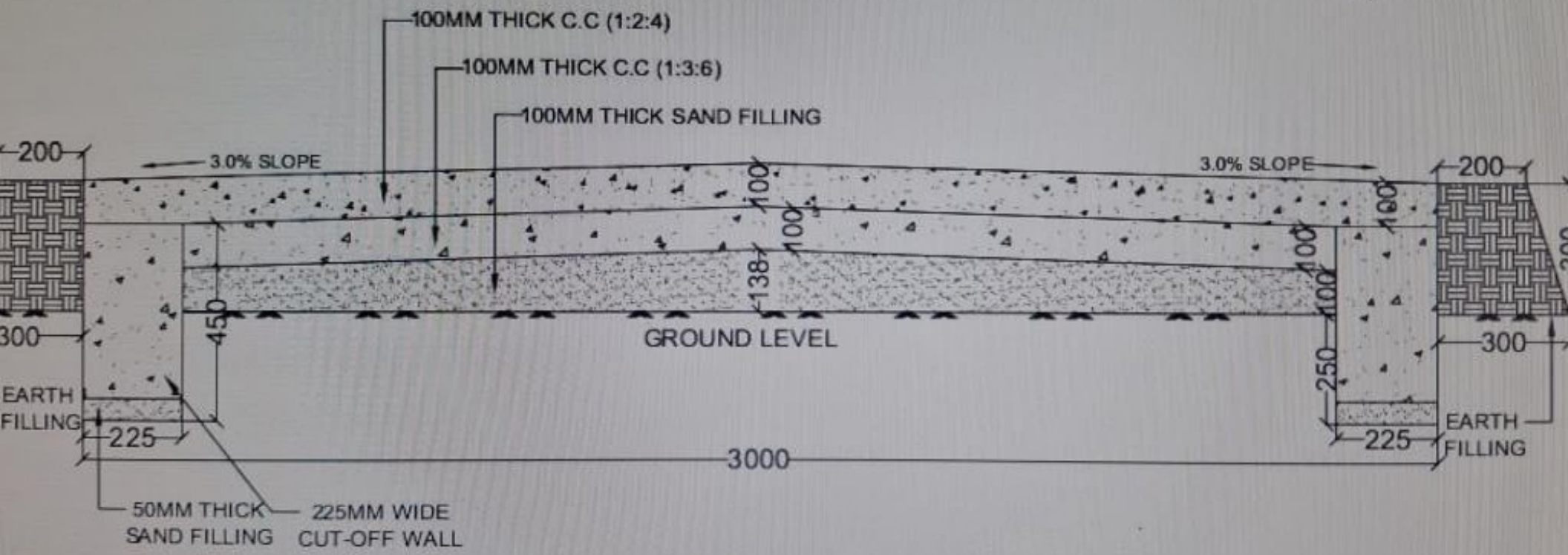

TYPICAL CROSS SECTION OF CEMENT CONCRETE ROAD WITH CUTOFF
(3.0M WIDE IN HARD SOIL AREA)

ALL DIAMENTION ARE IN MM