ALL DIMENSIONS ARE IN FEET

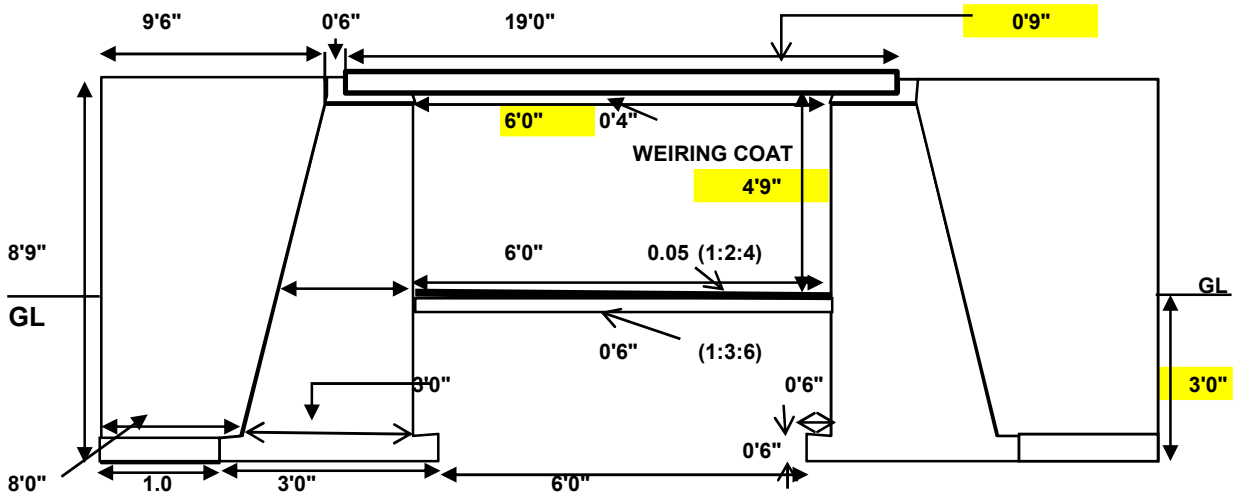

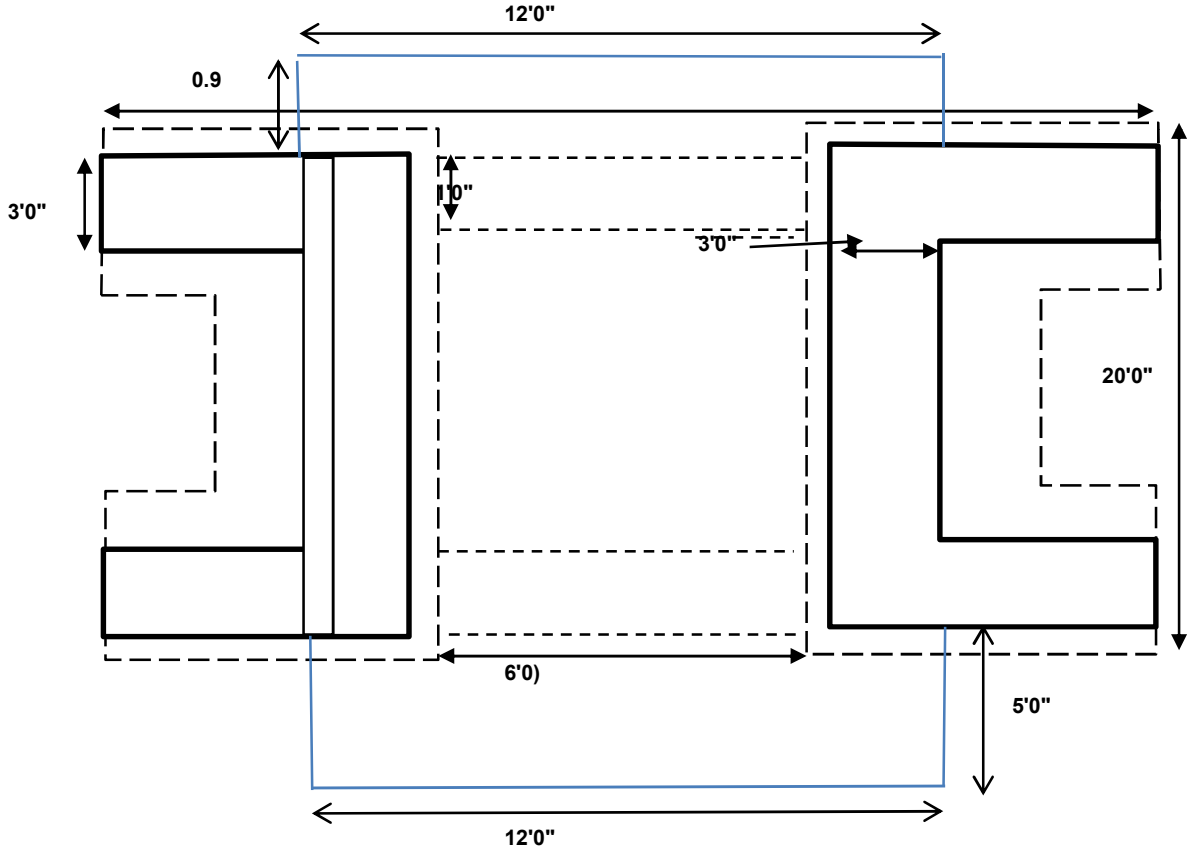

Juniour Engineer
Patna Block

Asst. Exe. Engineer
Patna Block